Installation Guide for Elevate Snap-on Fascia

Elevate
26 Century Blvd., Suite 205
Nashville, TN 37214
Contact your local Elevate representative.

DATE: 04/28/23 | DRN BY: PL | CKD BY: PL | DWG #: 13110-38087 | REV: C

Installation Guide for Elevate Snap-on Fascia

ANSI/SPRI/FM4435/ES-1 TESTED

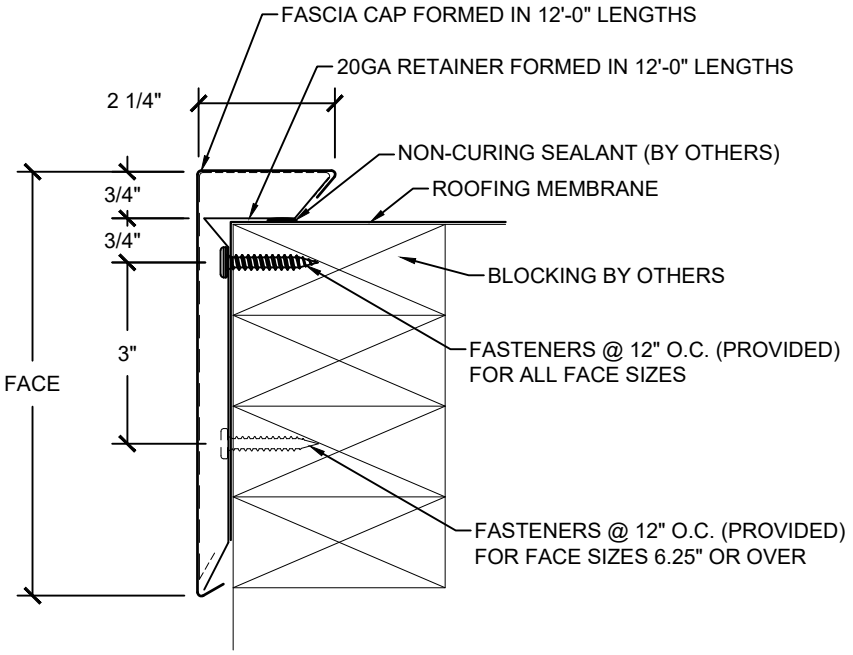

NOTES:
#1 - Isolate all metal parts from ACQ treated wood or other galvanically incompatible material with appropriate membrane material.
#2 - Appliance attachments, such as lightning rods, signs, or antennae that penetrate the edge system, induce a galvanic reaction, or otherwise compromise the effectiveness of the roof edge system, shall be eliminated or isolated to prevent problems per ANSI/SPRI/FM4435/ES-1. Lightning protection systems for example must not be directly affixed to the product provided by Manufacturer. Consult Manufacturer for alternative attachment suggestions.

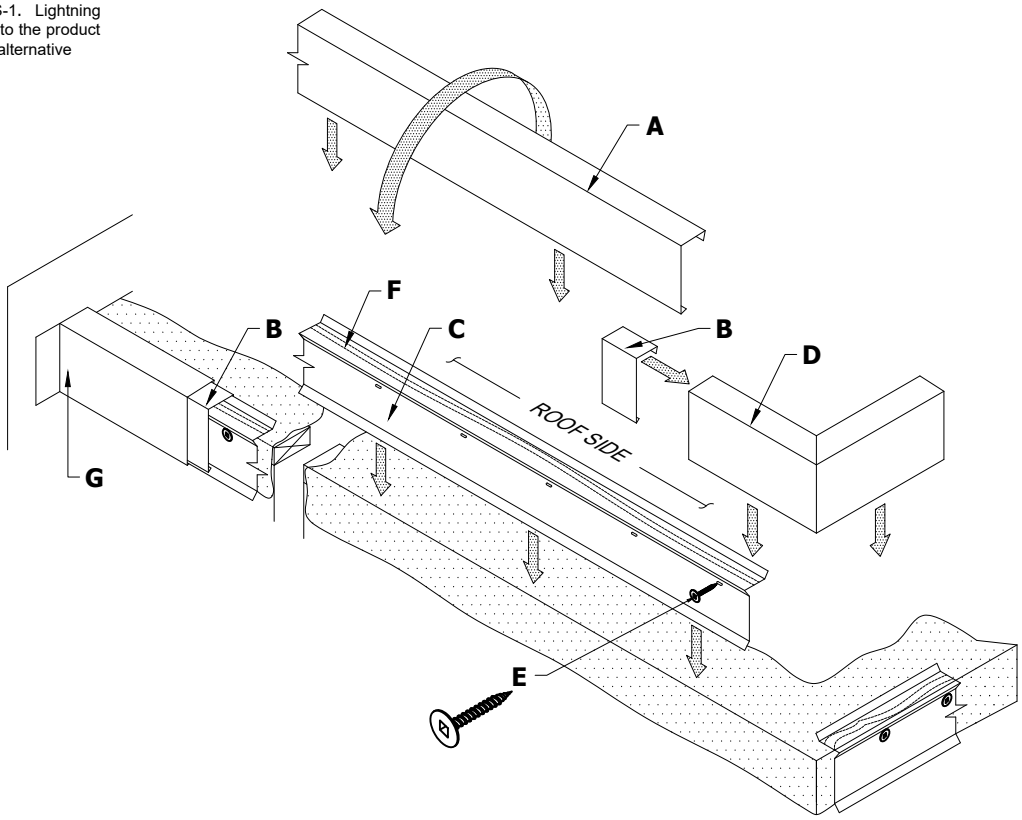

A. Formed Fascia Cover

B. Concealed Joint Splice

C. Retainer

D. Fascia Miter Cover
(Outside Corner Shown)

E. Fastener
at 12" o.c. (6" from ends) @ Pre-Punched Holes
Lower Fastener Required @ Pre-Punched Holes for Faces 6.25" or Greater

F. Non-Hardening Sealant
Continuous Bead of Sealant
(By Installer)

G. End Term
(Right Hand Shown)

ELEVATE

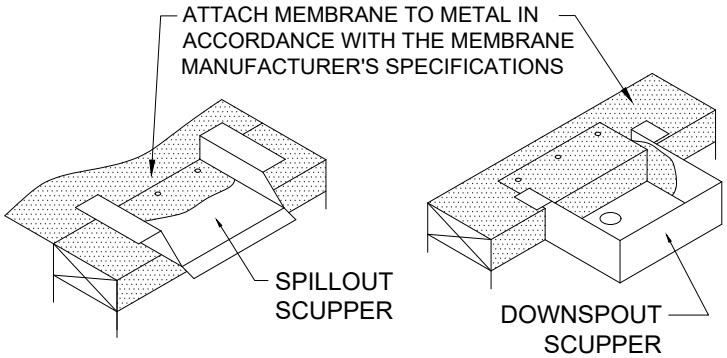

STEP 1: Consider Downspout Scuppers & Spillout Scupper Locations

Locate Downspout Scuppers where downspouts will be located. Scuppers are installed prior to the retainer. The retainer butts up to side(s) of scupper. Spillouts are installed along with the fascia lengths as required. Refer to "Downspout Scuppers & Downspout Scupper Install Guide" for more info on installation if necessary.

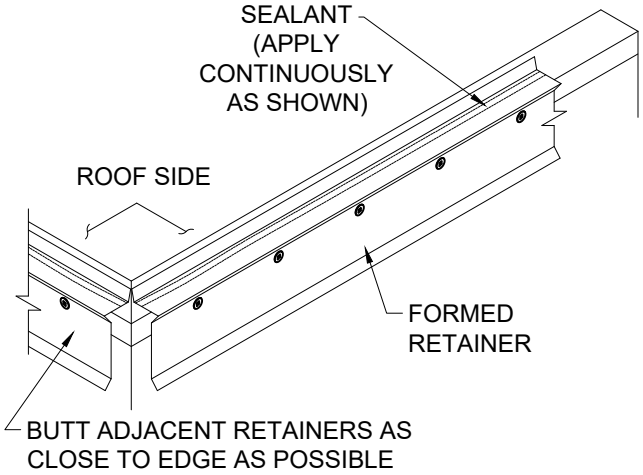

STEP 2: Installing Retainer

Apply a continuous bead of the roofing manufacturer's sealant to the bottom side of the retainer. Set the retainer onto the roof edge over membrane placing as close to corner as possible being sure to allow for adjacent retainer. Finally using the mechanical fasteners provided secure the assembly to the substrate. Butt adjacent retainer to initial and repeat.

Note: Pre-drill Pilot Hole for Masonry Attachment

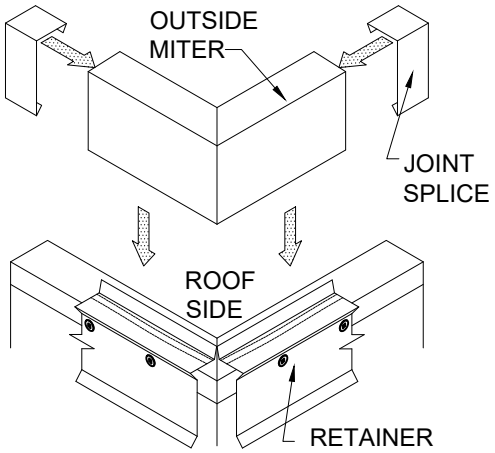

STEP 3: Installing Outside Fascia Miters

Locate the miter and concealed joint splice for the appropriate corner. Place a splice in each side of the miter, hook the top flange of the miter onto the top flange of the retainer, rotate the fascia outward towards the outside of the building. Lastly press down on the top flange of the fascia to snap the bottom hook onto the bottom of the retainer. Make sure that the hook of the fascia has fully engaged onto the retainer.

(DO NOT HOOK THE BOTTOM OF THE SPLICE ONTO THE RETAINER)

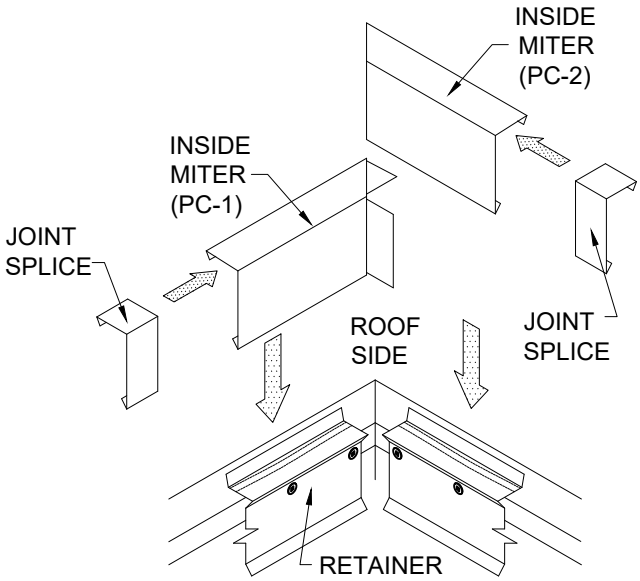

STEP 4: Installing Inside Fascia Miters

Locate the two piece miter and concealed joint splices for the appropriate corner. Place a splice in each side of the miter, hook the top flange of PC-1 onto the top flange of the retainer, and rotate the fascia outward towards the outside of the building. Press down on the top flange of the fascia to snap the bottom hook onto the bottom of the retainer. Ensure the bent flange of PC-1 is seated in the corner and that the hook of the fascia is fully engaged on the retainer. Install PC-2 in the same manner, and by overlapping onto the bent flange of PC-1 and by overlapping the top of the PC-1 miter section. (DO NOT HOOK THE BOTTOM OF THE SPLICE ONTO THE RETAINER)

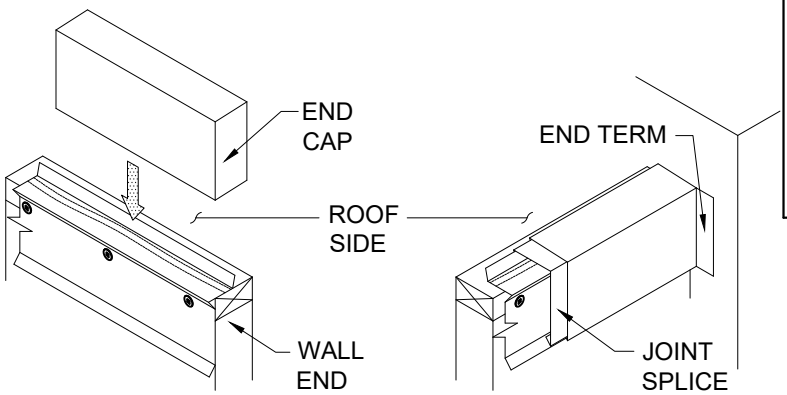

STEP 5: Installing Fascia End Caps and End Terms

Install end caps and end terms by hooking top and pressing top face downward to snap fascia into place.

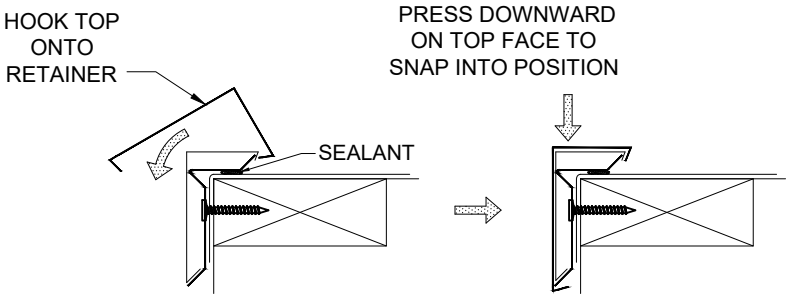

ELEVATE

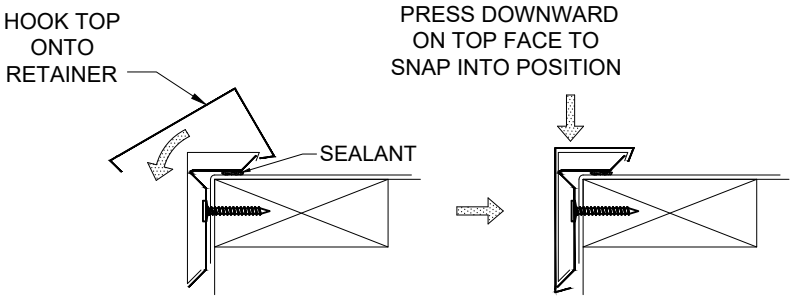

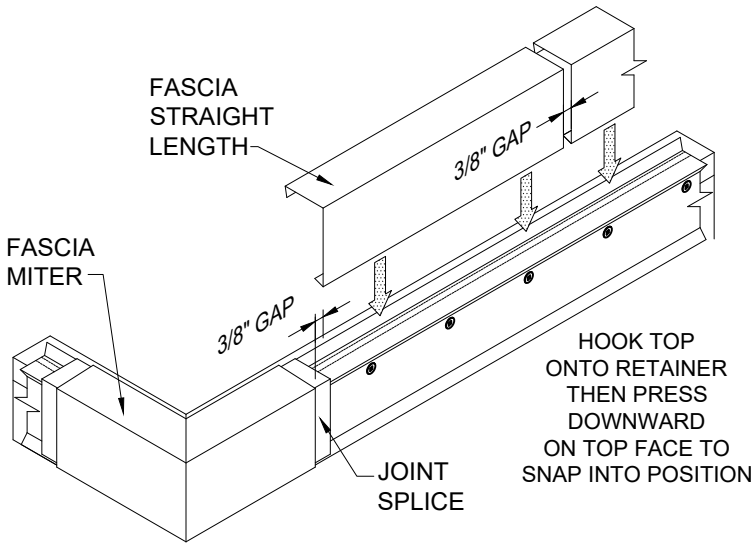

STEP 6a: Installing Fascia Straight Lengths

Place a concealed joint splice in the opposite end of the installed miter. Install the fascia by hooking the top and pressing the top face downward to snap fascia into place. **Allow a 3/8" gap between fascia sections for thermal expansion**. Review lengths of all straight pieces prior to cutting to avoid creating relatively short sections of fascia adjacent to full length sections. (DO NOT HOOK THE BOTTOM OF THE SPLICE ONTO THE RETAINER)

Note: There must be a splice at every joint.

STEP 6b: Installing Fascia Radius Lengths

Place a concealed joint splice in the opposite end of any adjacent piece. Install the fascia by hooking the top and pressing the top face downward to snap fascia into place. **Allow a 3/8" gap between fascia sections for thermal expansion**. Review lengths of all pieces prior to cutting to avoid creating relatively short sections of fascia adjacent to full length sections. (DO NOT HOOK THE BOTTOM OF THE SPLICE ONTO THE RETAINER)

Note: There must be a splice at every joint.

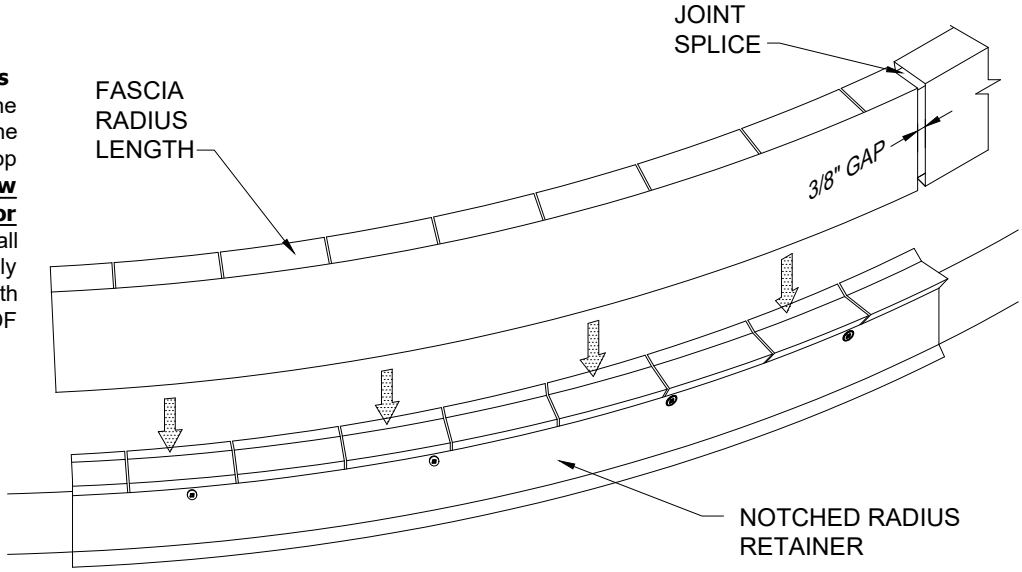

STEP 6c: Installing Fascia Vaulted Lengths

Vaulted fascia uses intermittent straight clips. The lengths of the clips may vary depending on the vault radius specified. Locate a clip at each joint location so that the cap will overlap the clip to the middle of the clip. Secure the clip with the fasteners provided in the pre-punched holes. Also place a clip at the middle of each cap section and secure with the fasteners provided. Place a concealed joint splice in the opposite end of any adjacent cap piece. Install the fascia cap by hooking the top and pressing the top face downward to snap fascia into place. **Allow a 3/8" gap between fascia sections for thermal expansion**. Review lengths of all pieces prior to cutting to avoid creating relatively short sections of fascia adjacent to full length sections. (DO NOT HOOK THE BOTTOM OF THE SPLICE ONTO THE RETAINER)

Note: There must be a splice at every joint.

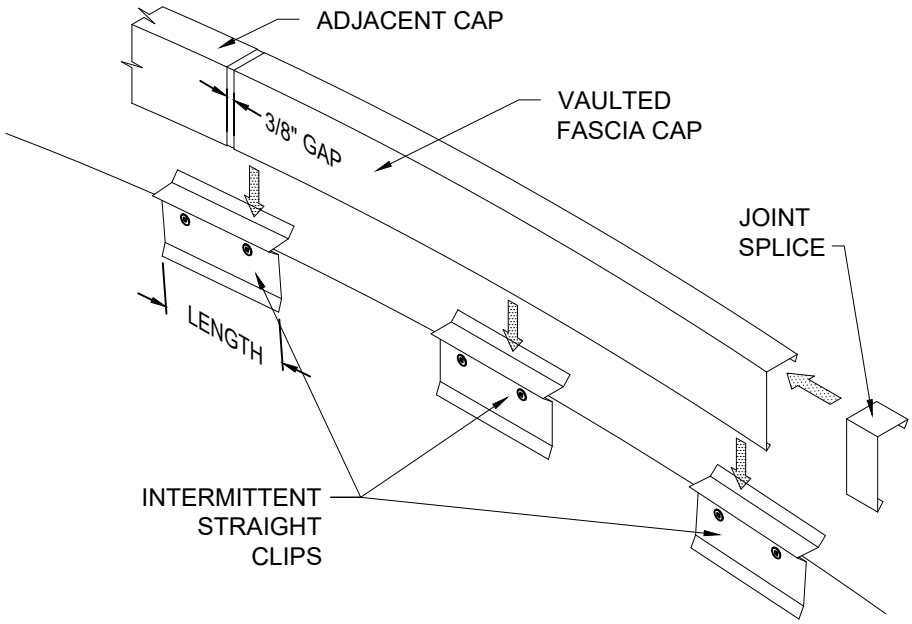

Installation Guide for Elevate Snap-on Fascia Downspout & Spillout Scupper

DOWNSPOUT SCUPPERS

STEP 1: Installing Downspout Scupper Core

Locate Downspout Scupper Cores where downspouts will be located. Downspout Scuppers are installed prior to the retainer. Fasten scupper core to the wood nailer with a min. of (3) ring shank nails.

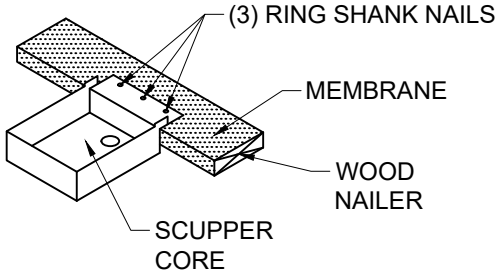

STEP 2: Installing Retainer at Downspout Scupper Core

Butt retainer to the scupper core. Apply membrane flashing strip into the scupper core as required by membrane manufacturer's specifications. Splice and seal the membrane in and around the scupper core in accordance with membrane manufacturer's specifications.

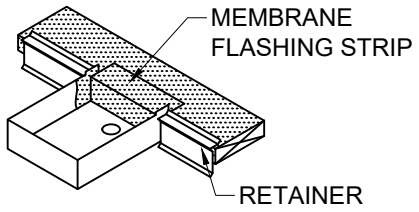

STEP 3: Installing Downspout Scupper Face

Place a concealed joint splice in each end of scupper face. Install scupper face by hooking top and pressing top face downward to snap fascia into place.

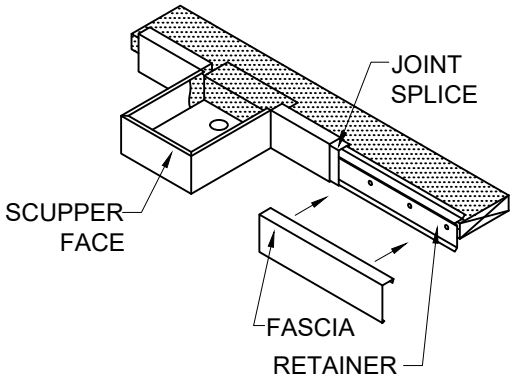

SPILLOUT SCUPPER

STEP 1: Installing Spillout

Spillout Scuppers are installed along with the fascia lengths as required. Spillout Scuppers are installed prior to the spring clip. Fasten spillout to the wood nailer with a min. of (2) ring shank nails.

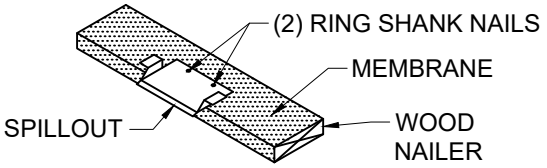

STEP 2: Installing retainer at Spillout Scupper

Butt retainer to the spillout. Apply membrane flashing strip into the spillout as required by membrane manufacturer's specifications. Splice and seal the membrane in and around the spillout in accordance with membrane manufacturer's specifications. (DO NOT TO LEAVE ANY SHARP EDGES AGAINST THE MEMBRANE.)

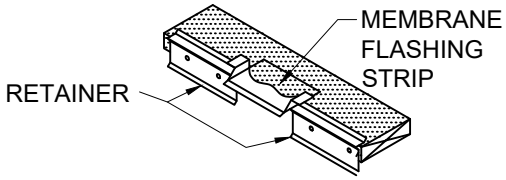

STEP 3: Installing Spillout Scupper Face

Place a concealed joint splice in end of fascia. Position scupper face in a manner to engage the top of the retainer. Press top face downward to snap fascia into place.

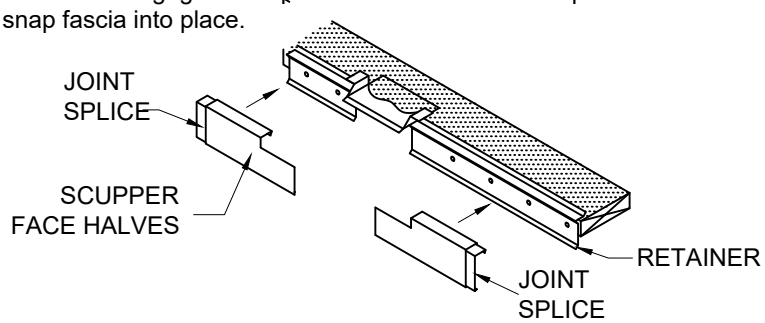

STEP 4: Installing Spillout Scupper Face
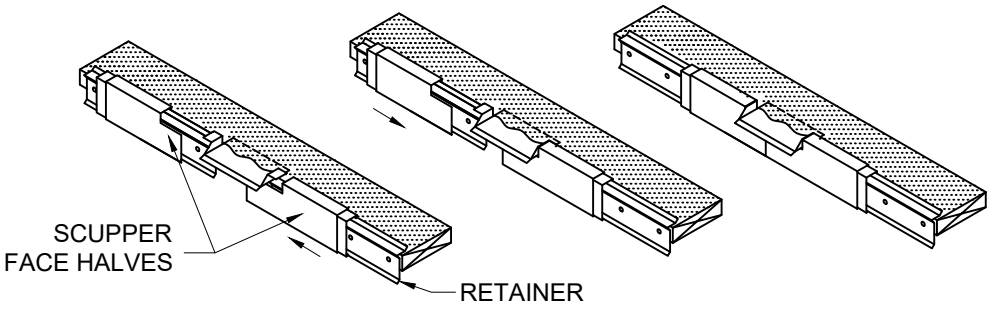
Slide the Scupper Face halves together under the Spillout and over the Spillout flanges. Allow the tabbed Scupper Face half to go under the other half and inside the formed drip of the non tabbed side.